ADF OVAL GEAR FLOWMETERS

MODEL ADF007

Instruction & Operation manual

ALPHADYNAMIC PUMPS (UK) LIMITED

Manufacturer & Exporter of Industrial Pumps & Flowmeters
Rockleigh House, 37 Burton Road, Ashby de la Zouch, Leicestershire, LE65 2LF - ENGLAND
Registered in England & Wales. Registration Number: **09706219** - Vat No: **GB 220393343**
Tel.: +44 1213 680324, +44 1213 680472
e-mail: sales@alphadynamicpumps.co.uk - www.alphadynamicpumps.co.uk

CONTENTS MANUAL

1. To the ownwer.. 3
2. Operation..... ..3
3. For the use in ex-zones 3
4. PPS chemical compatibility ……..……4
5. Installation ……..... ....……....……5
6. Operating principle……...……...……...……6
7. Electrical connections……..…...……..……..6
8. Meters fitted with integral instruments……....……..……..……7
9. Meter Callibration Factor ……..……..……..……7
10.Maintenance……....……..…...……...……...……..……..……7
11. Dissasembly of pulse meter……..……..……..7
12. Dissasembly of meters fitted with an instrument……..……..8
11. Meters Parts listing..……..…...…...……..8
12. Inspection……..……..…9
13. Re-assembly of meter…….....9
14. Meter trouble shooting……10
15. ADF007 Meter specification……...10
13. Warranty……...……..……... …..11

To the owner

Thank you for purchasing a ADF series flow meter. Please take a few minutes to read through this manual before installing and operating your meter. If you have any problems with the meter, refer to the maintenance and trouble shooting sections of this manual

This manual contains connection and operating instructions for the ADF series meters. If you need further assistance, contact us or your local representative for advice. The ADF series flow meter has incorporated the oval rotor principle into its design. This has proven to be a reliable and highly accurate method of measuring flow. Exceptional repeatability and high accuracy over a wide range of fluid viscosities and flow rates are features of the ADF series flow meter design. The low pressure drop and high pressure rating means the ADF series flow meter is suitable for both gravity and pump (in-line) applications.

Operation

Please read this information carefully before use!

Before use, confirm the fluid to be used is compatible with the meter, or consult your local representative for advice. This meter will handle particle sizes up to 0.075 mm/0.0003". To prevent damage from dirt or foreign matter, we recommend a Y or basket type 200 mesh for types ADF1 & ADF2 , 100 mesh for types ADF4,ADF7,ADF10,ADF40,ADF50 and 40 mesh for types ADF80 & ADF100 strainer, be installed as close as possible to the inlet side of the meter. To prevent damage to the meter slowly fill the system with fluid (this will prevent damage caused by air purge). Note: Failure to do this could damage the meter. For pump applications, turn off the pump at the end of each day

For the use in ex-zones

Hazardous area wiring : Intrinsically safe wiring *including using the reed switch pulse output as simple apparatus ,wiring to an intrinsically safe instrument or wiring to the Exd explsionproof option (Exd IIB T4/T6) wiring techniques must be undertaken in accordance with the rules ,regulations and requirements applying to the territory in which the meter is being installed . The meters should only be connected by qualified staff , the qualified staff must have knowledge of protection clases, regulations & provisions for the apparatus in hazardous areas.*

- *Reed switch: Connection to intrinsically safe electric circuit (simple electrical equipments must be operated intrinsically safe with a suitable barrier according to EN 50020).*
- *Equipotential bonding has to be ensured upon the pipe system.*
- *Ambient temperature must be between - 20°C and + 40°C **(T4).***
- *If electronical register is mounted on the meter or operated with the meter, the electronical register must have a current ATEX approval and must be operated intrinsically safe with a suitable barrier according to EN 50020.*

PPS Chemical compatibility

PPS plastic flowmeters are suited to most based products ,selected types of chemical and are also suitable for most fuels,fuel oils and lubricating liquids.
PPS is resistant to chemical attack from all non – aromatic *containing benzene) non-halogenated (containing haloged susch as chlorine,bromine) organic solvents at any concentration.
PPS is also resistant to most water based solution of acids , bases or neutral salts with exception of strong oxidizing acids such nitric acid, hydrofluoric acid and hydrochloric acid.
Ist is not suitable for use with any strong acids of any kind (ph<2) at temperature above ambient.

Strong bases do not degrade PPS however strong bases at higher temperatures may cause long term damage to the flowmeter.

PPS is not generally suitable for use with oxidizing chemicals in high concentrations; However use with these chemicals under mild conditions may be suitable depending on the particular application. Hydrogen perioxide chlorine and sodium hypochlorite will cause swelling and plasticizing of PPS with extensive exposure above 5% concentration or even lower concentrations at higher temperatures. PPS can withstand mild solutions of these chemicals used in common cleaning or disinfectant products if temperatures are kept below 65C

PPS can be used with hot water up to the maximum temperature rating of the meter of 80C and can be used with evenly heated sea-water and water containing low concetrations of chlorine (less than 1% concetration are acceptable)

Installation

1) It is recommended that when setting up pipework for meter instillations a bypass line be included in the design.This provides the facility for a meter to be removed for maintenace without interrupting production.(See Fig. 1)

2) Use thread sealant on all pipe threads.

3) For pump applications ensure pipe work has the appropriate working pressure rating to match the pressure output ut the pump. See Meter Specifications section for further details.

4) Install a wire mesh strainer (Y or basket type 60 mesh as close as possible to the inlet side of the meter.

5) Ensure that the meter is installed so that the flow of the liquid is in the direction of the arrows embossed on the meter body.

6) The meter ran be installed in any orientation as long as the meter shafts are in a horizontal plane. (Refer to Fig.2 for correct installation) The register assembly may be orientated to suit the individual installation. Note: Incorrect installation can cause premature wear of meter components.

7) Do not over tighten meter connections,

8) **It is important that after initial initial installation you fill the line slowly, high speed air purge could cause damage to the rotors.**

9] Test the system for leaks.

10] Check the strainer for swarf or foreign material., after the first 200 litres check periodically, particularly if the flow rate decreases.

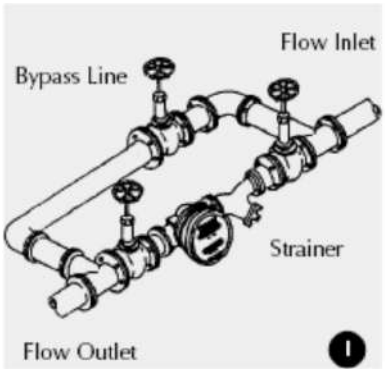

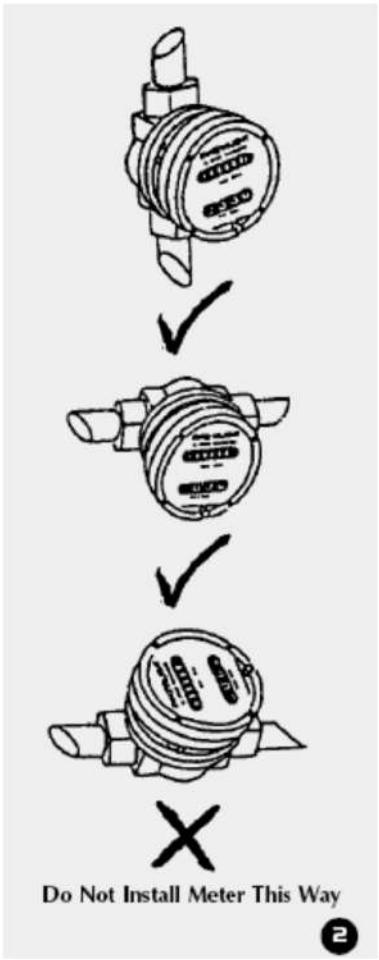

Operating Principle

When fluid passes th rough the meter the rotors turn, as shown below. The magnets which are located in the rotors will pass across the pulser circuit board (containing either Reed switches or relevant LC display or receiving Hall Effect sensors). A signal is instrument, generated which is then sent by the Pulse Circuit Board (PCB) to the relevant LC display or receiving instrument

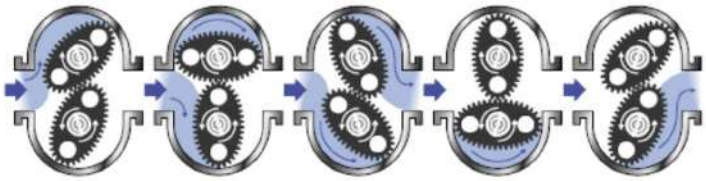

Electrical Connections

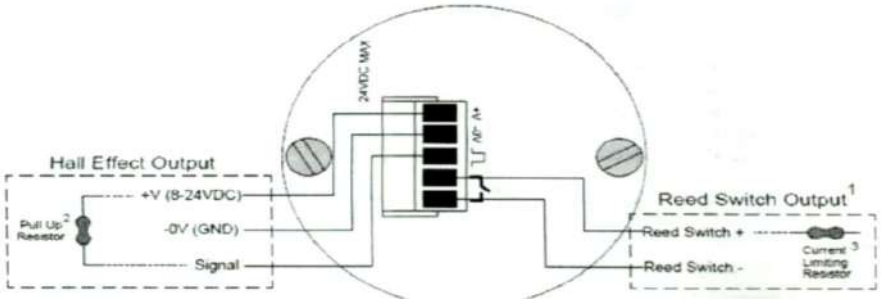

1. For installations subject to electrical noise; signal filtering can be enabled on the read switch output by wiring the negative terminal of the reed switch (terminal5) to the GND terminal (terminal2)

2. Pull up resistor required for operation of hall effect output. 10 kΩ is recommended. If using smaller values of pull up resistance ensure current draw is kept within allowable limits by using the following equation; R=(supply voltage * 100)

3. Installing a current limiting resistor is recommended as a minimum resistance value. resistor not required when connecting to battery powered flow instruments.

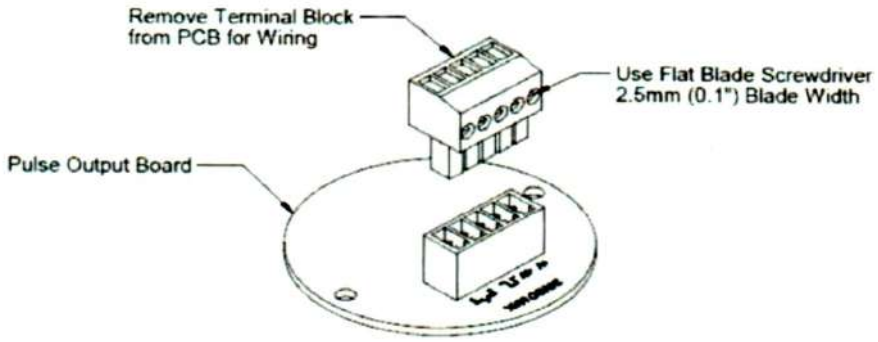

***Note that due to the signal filtering components in the standard pulse output board (hall/reed) the reed switch output on this PCB is no longer a simple apparatus. For any simple apparattus or intrinsically safe applications the reed only pulse output board must be used.**

Meters fitted with integral instruments

If your flow meter is fitted with an integral instrument such as a totaliser , rate totaliser or batch controller then the pulse output from the meter has been factory wired to the flow input of the readout instrument

Meter Calibration Factor (K or scale Factor)

Each flowmeter is individually calibrated and suppled with a calibration certificate showing the number of pulses per unit volume (eg pulses per litre)

Nominal figures are shown in the specification section of this manual.

Meters fitted with integral instruments will have the relevant calibration factor entered into the program of the instrument. Please refer to relevant instrument manual for programming details.

Maintenance

Adhering to the installation instructions in this manual should ensure your meter provides the required operational performances. These are mechanical meters and a periodic maintenance and ispection regime will maximize the operational availability of the meter.

The frequency of maintenance depends on the application factors including liquid lubricity and abrasiveness and operational factors such as floowmeters and temperature

BEFORE undertaking meter maintenance ensure the following:

Associated alerms or control outputs are isolated so not to affect the process

Voltage supply is isolated from the meter

Liquid supply to the meter is closed off

The meter is depressurized and liquid drained from the meter.

Dissasembly of pulse meter

If required to gain access to the meter terminals and pulse output board , undo the 4 cap screws (10) remove the cover (9) carefully to aavoid putting strain on the terminal connections. The pulse output broad (6) can now be accessed and removed if necessary (screws 7). If required to gain access to the oval geared rotors undo the 8 body screws (5) carefully pry the meter body apart avoiding misplacing or damaging the oring (3) and rotors (2).

Dissasembly of meters fitted with an instrument

If the meter is fitted with an integral instrument the instrumennt display assembly must be removed if required to gain access to the instrument terminal connections , instrument battery or pulse output board . This is achieved by undoing the bezel screws and separating the display assembly from its base. Do not sstress or damage the wires that connect the display assembly to the meter output . Take care not to misplace or damage orings. The pulse output broad can now be accessed. To remove the pulse output broad , first the screws that fix the instrument base to the flowmeter.

ADF 007 Meter Parts Listing

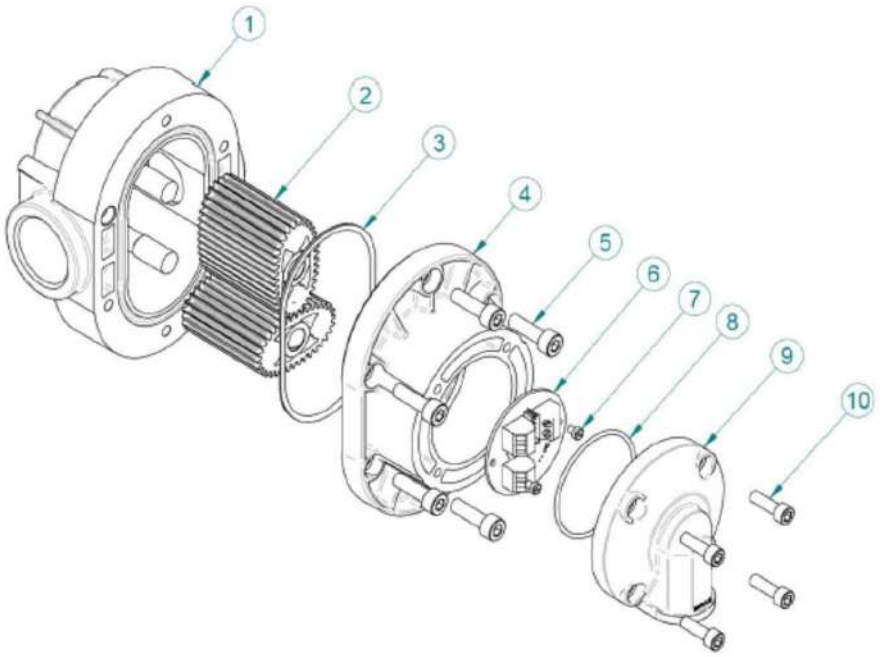

Item No.	No. Off.	Rec. Parts	Part or Set (Order From this column only	Part Description
1	1		1503-0001	Meter Body 1 ” BSP PPS
2	2	#	1503-0010	Rotors PPS
3	1	#	1503-0016	Oring Viton
3	1	#	1503-0015	Oring PTFE
4	1		1503-0017	PPS Cap
5	6		1503-0020	Body screw
6	1	#	1504-0019	Pulse output board
7	2		1503-0022	Output board screw
8	1		1503-0021	Terminal cover oring
9	1		1503-0023	Terminal cover standard
10	4		1503-0025	Terminal cover screw

Inspection (refer Exploded view)

Inspect o-rings for damage , chemical attack, deformity or any form of deterioration.

Remove inspect and clean the rotors also check that the magnets have not been chemically attacked. Check the measuring chamber for damage or scoring & redress if necessary , the rotors shafts should NOT be loose or able to be rotated.

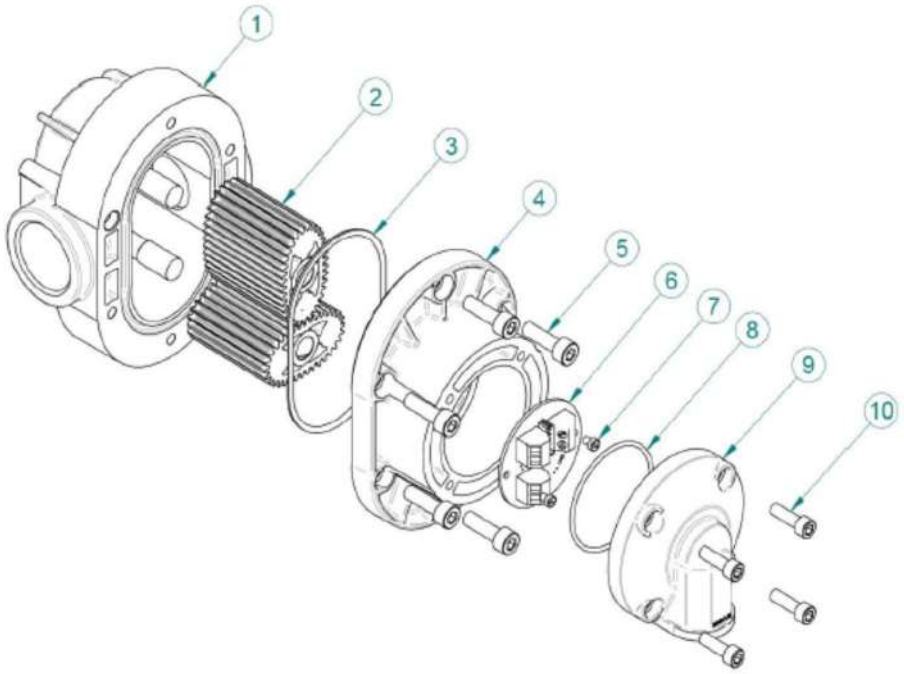

Re-assembly of meter (refer Exploded view)

4.5 Re-assembly of meter *(refer Exploded View)* When re-installing the rotors all four magnets MUST be oriented towards the pulse output board (6) when both rotors are in place. The magnets are not visible being installed in blind holes from the underside of the rotors, then sealed in place by screws or plugs. The magnet locating screws or plugs are visible and should not be mistaken for magnets. The position of the magnets can be checked with a small steel object such as a steel ruler, paperclip or similar item held at the end of the rotors.

Both rotors will only engage correctly if fitted precisely at an orientation of 90 degrees to each other. Rotate the rotors slowly by hand to ensure they are correctly fitted at the same time check the rotor shafts & rotor bearings for wear.
Fit the O-ring into the groove and assemble the two parts of the meter, the body & cap align with a location pin.

Fit the body cap screws (5) and tighten in a star sequence, then carryout a final check tighten in the same sequence to a firm torque. This sequence and procedure ensures the meter bodies are assembled correctly and evenly.

Warning: **Do not over tighten** any screw fasteners in these PPS plastic meters, otherwise the internal screw threads will be stripped from the plastic components.

Fit the pulse output board, terminal cover or instrument as appropriate.

Meter trouble shooting

TROUBLE	CAUSE	REMEDY
Fluid will not flow through meter	a] Foreign matter blocking rotor; b] Line strainer blocked c] Damaged rotors d] Meter connections over tightened e] Fluid is too viscous	a] Dismantle meter, clean rotors (Strainer must befitted in line) b] Clean strainer c] Replace rotors (Fit strainer) d] Re-adjust connections e] See specifications for maximum viscosity
Reduced flow through the meter	a] Strainer is partially blocked b] Fluid is too viscous	a] Clean strainer b] See specifications for maximum viscosity
Meter reading inaccurate	a] Fluid flow rate is too high or too low b] Fluid is too viscous c] Excess wear caused by incorrect installation	a] See specifications for minimum and maximum flow rates b] Bleed air from system c] Check meter body and rotors. Replace as required. Refer to installation instructions
LCD Register not working	a]Battery not connected properly b] Battery flat c] Faulty wiring wiring connections d] Faulty LC display e] Faulty connection from LCD display to Pulse PCB	a] Check battery connections b] Replace battery c] Check wiring tor loose or faulty connections d] Replace LC display e] Check wiring connections
Meter not giving a pulse signal	a] Faulty hall effect sensor b] Fault,- reed switch c] Magnets failled	a] Replace PCB Board b] Replace PCB Board c] Replace magnets

ADF 007 Meter Specification

METER TYPE	PULSER TYPE	LCD DISPLAY AMR100	LCD DISPLAY F030,F130,F110
Flow Ranges Ltres/minute-US Gall/min	10 to 150 / 2.6 to 40	10 to 150 / 2.6 to 40	10 to 150 / 2.6 to 40
Accuracy of Reading	+/-0.5%	+/-0.5%	+/-0.5%
Repeatability	Typically +/- 0.03%	Typically +/- 0.03%	Typically +/- 0.03%
***Maximum Viscosity**	1000 Centipoise	1000 Centipoise	1000 Centipoise
Max. Operating Pressure	5 BAR // 72 PSI	5 BAR // 72 PSI	5 BAR // 72 PSI
Max. Operating Temp.	80° C/176°F	80° C/176°F	80° C/176°F
Output pulse resolution **Reed switch Output** **Hall effect output (NPN)** **Reed switch Output** **Hall effect output (NPN)**	 27 pulses / litre 102 pulses / litre 107 pulses / US gallon 405 Pulses / US gallon	 27 pulses / litre 107 pulses / US gallon	 27 pulses / litre 107 pulses / US gallon
Hall effect output (NPN)	3 wire open collecttor , 5-24 Vdc max .., 20mA max		
Reed switch output	30Vdc x 200 mA max	30Vdc x 200 mA max	30Vdc x 200 mA max
Recommended filtering	150 microns 100 mesh (minimum)	150 microns 100 mesh (minimum)	150 microns 100 mesh (minimum)

*** Unless High Viscosity Rotors are fitted**

*** Maximum flow on fuels may be maintained for intermittent periods of refueling**

*** Maximum flow is to be reduced as viscosity increases , max pressure drop 100Kpa (15PSI)**

*** The flowmeters in Alu rotors are suitable only for fuels , fuel oils & lubricating liquids**

Warranty

ALPHADYNAMIC Co warrants meters and parts manufactured and supplied by it hereunder to be free from defects in materials and workmanship for a period of **18** months from date of shipment or **12** months from date of installation, whichever period shall be shorter. If within such period any meters or parts shall be proved to seller's satisfaction to be defective, such meters or parts shall be repaired or replaced at seller's option, seller's obligation hereunder shall be limited to such repair and replacement and shall be conditioned upon seller's receiving written notice of any alleged defect within 10 days after its discovery and, at seller's option, return of such meters or parts to seller, f.o.b. its factory. THE FOREGOING WARRANTY IS EXCLUSIVE AND IN LIEU OF ALL OTHER EXPRESS OR IMPLIED WARRANTIES WHATSOEVER INCLUDING BUT NOT LIMITED TO IMPLIED WARRANTIES (EXCEPT OF TITLE) OF MERCHANTABILITY AND FITNESS FOR A PARTICULAR PURPOSE. The manufactuer shall not be liable for any defects attributable to acts or omissions of others after shipment, nor any consequential, incidental or contingent damage whatsoever.

Note:

This warranty does not form part of, nor does it constitute, a contract between ALPHADYNAMIC and the end user. It is additional to any warranty given by the seller of the products and does not exclude, limit, restrict or modify the rights and remedies conferred upon the end user, or the liabilities imposed on the seller, by any statute or other laws in respect of the sale of the product.

Each meter has been calibrated on mineral oil and will contain a small amount of oil residue.

The oil used is Castrol Diesel Calibration Fluid 4113 (product code 055830).